PowerBoss™

Illustrated Parts List

Not for Production

Questions? Help is just a moment away!
Call: Pressure Washer Helpline
1-800-743-4115 M-F 8-5 CT

Briggs & Stratton Power Products group, LLC
Jefferson, Wisconsin, U.S.A.

Model No. 020448-0 (3000 PSI Pressure Washer) IPL No. 312719 Revision - (03/11/2010)

Exploded View and Parts List — Main Unit

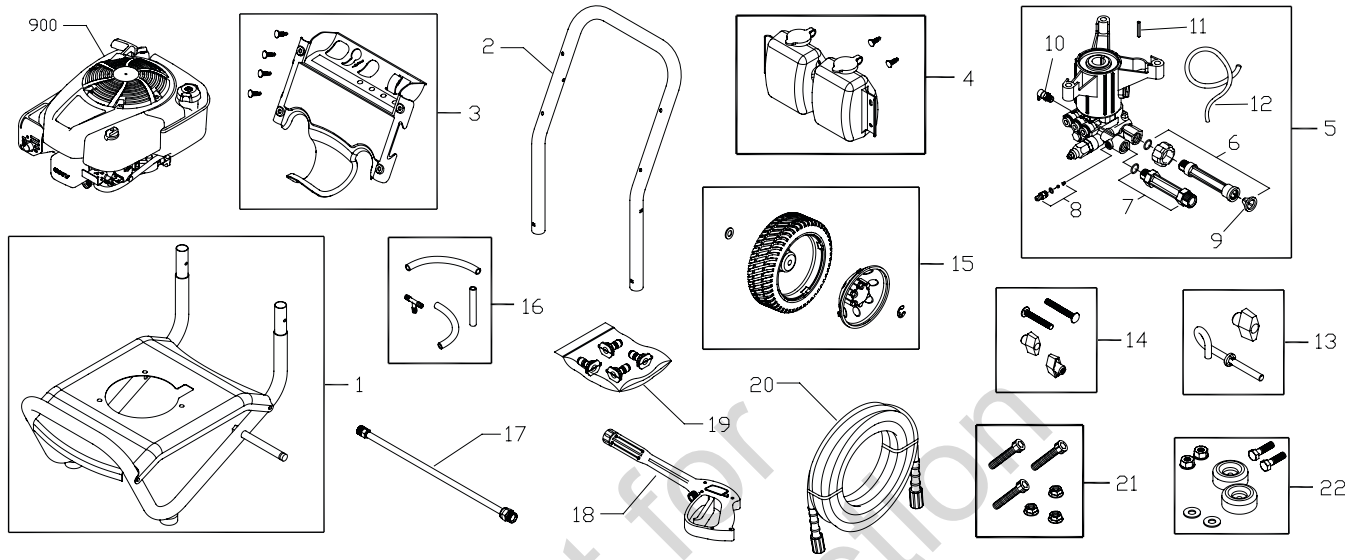

Not for Reproduction

Item	Part #	Description
1	312025GS	BASE
	205413GS	AXLE
2	199110ZGS	HANDLE
3	312328GS	BILLBOARD
	B1797GS	CLIPS
4	205366GS	TANK-CHEMICAL
	192980GS	KIT-FUEL VALVE
	B3222AGS	CAP-CHEMICAL TANK
	B3222BGS	CAP-CHEMICAL TANK
	B1797GS	CLIP
5	209261GS	PUMP
6	201496GS	KIT-WATER INLET
7	201497GS	FITTING
8	192914GS	KIT-CHEMICAL INJ
9	B2384GS	FILTER-GARDEN HOSE
10	208673GS	VALVE-THERMAL RELIEF
11	23139GS	KEY
12	310975GS	HOSE-CHEMICAL
13	205912GS	GUIDE-ROPE
14	B2203GS	KIT-HARDWARE HANDLE
15	209891GS	KIT-WHEEL
	192050GS	E-RING
	209604GS	HUBCAP
16	196813GS	KIT-CHEMICAL HOSE

Item	Part #	Description
17	200595GS	EXTENSION-QC
18	204627GS	GUN
19	208583GS	KIT-QC NOZZLES
	198841GS	NOZZLE-QC BLACK
	195983PGS	NOZZLE-QC YELLOW
	195983RGS	NOZZLE-QC WHITE
	195983ANGS	NOZZLE-QC RED
20	196138GS	HOSE
21	203526GS	KIT-HARDWARE PUMP MOUNTING
22	192310GS	MOUNT-VIBRATION
900	§	ENGINE

Items Not Illustrated

311937GS	MANUAL-OPERATOR
195015GS	TAG-WARNING
312088GS	DECAL-Shroud
BB3061BGS	OIL

Optional Accessories

6048	KIT-O-RING MAINTENANCE
6039	PUMP SAVER

§ - Contact Engine Manufacturer

Copyright © 2010 Briggs & Stratton Power Products Group, LLC. All rights reserved. No part of this material may be reproduced or transmitted in any form without the express written permission of Briggs & Stratton Power Products Group, LLC.